REV.	DATE	DESCRIPTION
D	11/08/99	UPDATE STRIPPING DIM'S

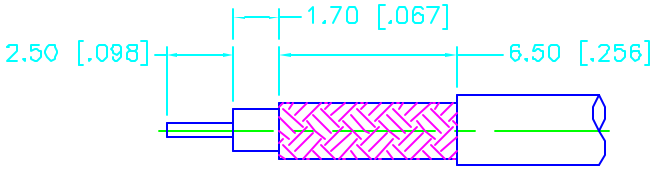

RECOMMENDED
CABLE STRIPPING DIM'S

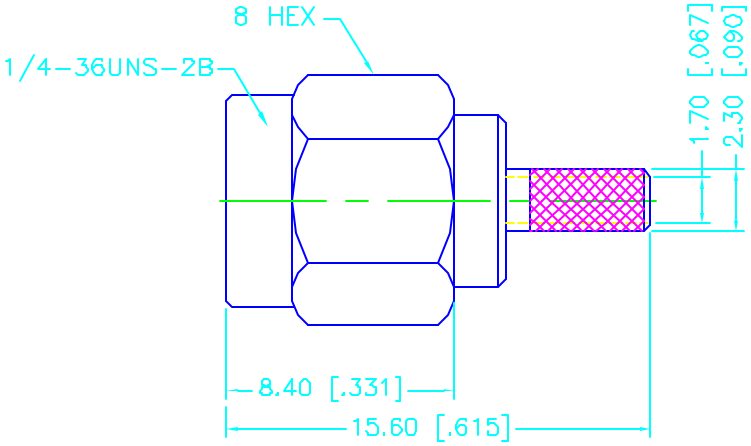

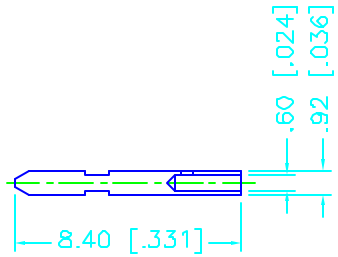

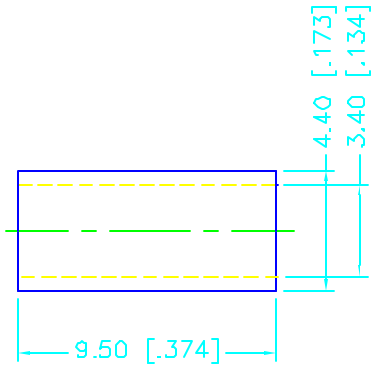

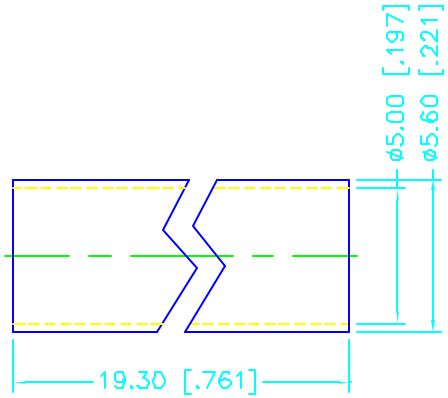

NOTE:

USE .151 HEX CRIMP DIE TO
TERMINATE FERRULE TO CABLE.
– CONNEX TOOL 47-10160
– IDEAL TOOL 36-489

	DESCRIPTION	MATERIAL	FINISH
1	BODY	BRASS	GOLD
2	INSULATOR	TEFLON	NATURAL
3	CONTACT PIN	BRASS	GOLD
4	HEAT SHRINK		
5			
6			
7			
8			

UNLESS OTHERWISE SPECIFIED DIMENSIONS ARE IN MILLIMETERS

DIMENSIONS IN [ ] ARE IN INCHES FOR CUSTOMER REFERANCE ONLY

UNLESS OTHERWISE SPECIFIED TOLERANCES FOR MILLIMETERS ARE:
0.5–6 = ± 0.2
6–30 = ± 0.4
30–120 = ± 0.6
120–315 = ± 1
315–1000 = ± 1.6
1000–2000 = ± 2.4

DO NOT SCALE DRAWING

APPROVALS		DATE
DRAWN	G.R.S.	11/08/99
CHECKED		
ISSUED		

Connector Corporation

TITLE: SMA CRIMP PLUG 316/U – DOUBLE BRAID

SIZE	FSCM NO.	DWG. NO.	REV.
A	99001	132178.DWG	D

SCALE	PART NO.	SHEET
NA	132178	1 OF 1